SIDARA | WALL LIGHT | SEASIDE ANTHRACITE

2618421250



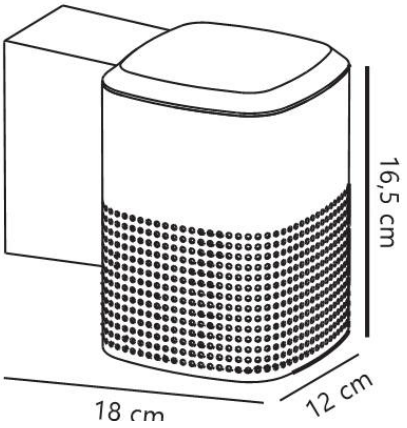

Item Number: 2618421250
EAN: 5704924025778
TUN: 2513824

Colour: Seaside anthracite
Primary material: Aluminium
Secondary material: Polycarbonate

IP degree: IP54
Socket type: E27
IK degree: IK05
Class (Class 1, Class 2, Class 3): Class 1 (Earth contact)
Parallel connection: No
Suitable for Seaside: Yes
Voltage (V): 220-240 Volt
Maximum bulb wattage (W): 15
Height (cm) : 16.5

Width (cm): 12

Pcs Per Master Carton: 3
Sales Box Height (cm): 18.5
Sales Box Width(cm): 19.5
Sales Box Depth (cm): 14
Sales Box Volume m³ : 0.0051
Product net weight (kg): 0.8

Decorative perforated design • Beautiful light effect • Extra durable material suitable for coastal areas (Designed For Seaside) • 10-year guarantee on surface deterioration

Designed by renowned Jacob Jensen Design, this Sidara wall light combines modern minimalism with a refined, architectural expression. The perforated surface creates a beautiful play of light and shadow in your outdoor areas. We recommend a high-lumen bulb to achieve the intended light effect. This product is part of our "Designed For Seaside" range, crafted with a unique surface treatment and paint to withstand even the harshest coastal weather conditions.